Figure 1: Powerpoint

KI für Market Graphs
(AI for Stock Market Predictions)

Prateek Kalra

Studiengang: AI(Angewandte Informatik)

Vortrag am 29.04.2025

Betreuer: Prof. Dr. Axel Schmolitzky & Prof. Dr. Peer Stelldinger

Figure 2: Powerpoint

Seminar Flow

1) Introduction: Traditional Investing strategies
2) Quant Funds: The Rise of Algorithmic Trading
3) LSTM: Learning from the Past to Predict the Future
4) LSTM in Action: Real-World Use Case
5) LSTM's Limitations & Enhancements: Enhancing Graph Predictions
6) Final Thoughts: The Future of AI in Investing

Quiz

Who is this?

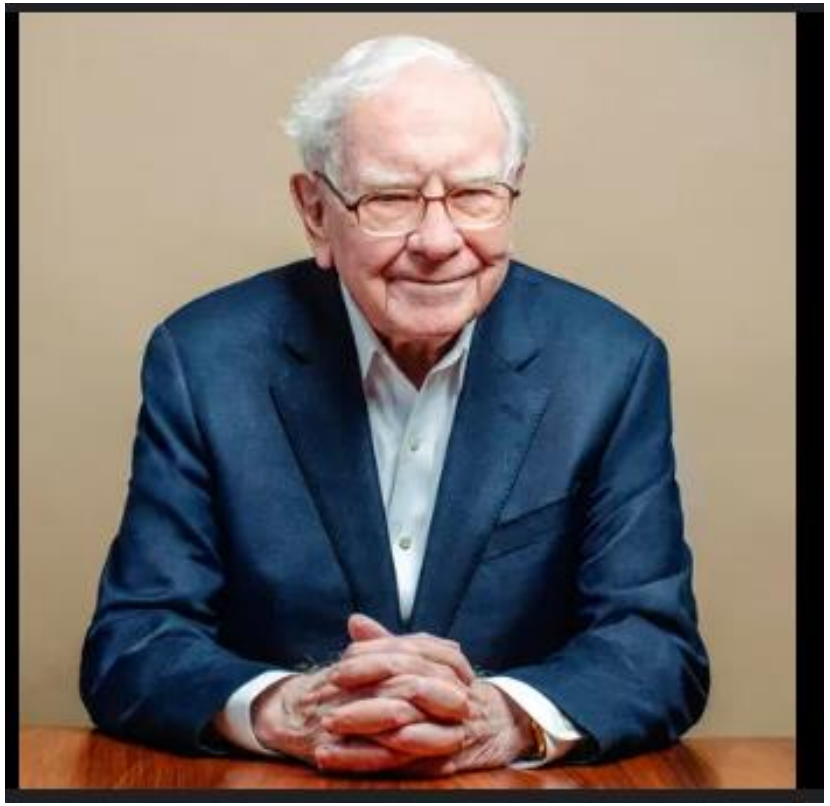

Figure 3: Forbes, 2025

Value Investing : The myth of PE ratio

"It's far better to buy a wonderful company at a fair price than a fair company at a wonderful price." – Warren Buffet, 1965

$$\text{P/E Ratio} = \frac{\text{Share Price}}{\text{Earnings Per Share (EPS)}}$$

A low P/E hints undervaluation
A high P/E hints overvaluation

PE Comparison

Figure 4: Alex Karp; Palantir, n.d.

Nike (NKE)

P/E Ratio (Early 2024): 25.31

Stock dropped of over 30% in the first half of 2024

(Yahoo finance, n.d. a)

Palantir

P/E Ratio (Early 2024): 190.78

Stock rallied from 17-18s $ to 75$

(Yahoo finance , n.d. b)

Golden Rules to build Wealth

Monopoly
- Google, around 92 percent market share for „Search“

Pricing power
- Netflix, constantly raising Prices every year

Operating Leverage
- Mastercard‘s Profit margin over the years

Organic Growth

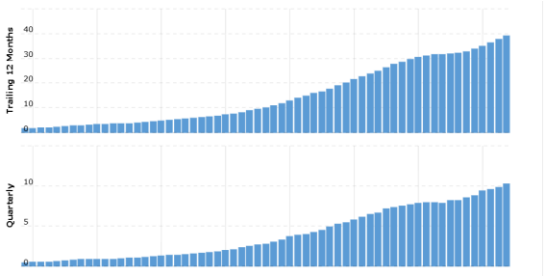

Figure 5: Macrotrends NFLX revenue

(Dorsey, 2008. pg 24-145 ,192) & (Carslon , 2024)

Quant Funds & The Rise of Algorithmic Trading

The Legend Jim Simons

- Former **MIT mathematician** and founded **Renaissance Technologies**
- Ran the **Medallion Fund**, often called the most successful hedge fund ever

Performance & Legacy

- **Medallion Fund** returned **~66% gross per year** (39% after fees) from 1988 to 2018
- Outperformed **Warren Buffett**, **George Soros**, and nearly every hedge fund in history

(Zuckerman 2019, pg 3-5)

Figure 6: Harvard, Maths Department, 2025

Quant Funds

- Applied **pure math and data science**
- Recruited **mathematicians, physicists, and linguists**
- Built models based on **pattern recognition, time-series analysis, and signal processing**
- Didn't rely on *fundamentals* like P/E or EPS — only **data and patterns**

(López de Prado 2018, pg 2,7-10)

Secret Sauce (Still Not Public)

- **Exact formulas, models, and algorithms remain a secret** — never published
- Medallion's tech stack and predictive systems are **proprietary & locked down**
- Staff operate under **strict NDAs**; only ~300 employees know the core systems
- No outside investors since 2005 — to avoid leaks and performance degradation

(Zuckerman 2019, pg 4-7, 168-170)

He did AI before AI was cool.

How Quant Models Beat the Market

Pattern Recognition

- Finding repeated beaviors and trends
- Example: Stock rising 3 days then sharply dropping
- LSTM models do automatic patter recognition from past days
- Jim Simons's approach: detect subtle, statistical patterns

Statistical Arbitrage

(Zuckerman 2019, pg 105-110)

- Uses maths to find price imbalances
- Example: Pepsi and Coca-Cola
- LSTM models predict mean reverting price
- Jim Simons's approach: Uses thousands of small trades (0.1%)

(Zuckerman 2019, pg 156-162)

LSTM : Long Short-Term Memory

- Long short-term memory network (LSTM) is a particular form of recurrent neural network (RNN), which is the general term of a series of neural networks capable of processing sequential data

- A **neural network** is a computer system inspired by how the **human brain** works — it learns from data to recognize patterns and make predictions

Neural Networks

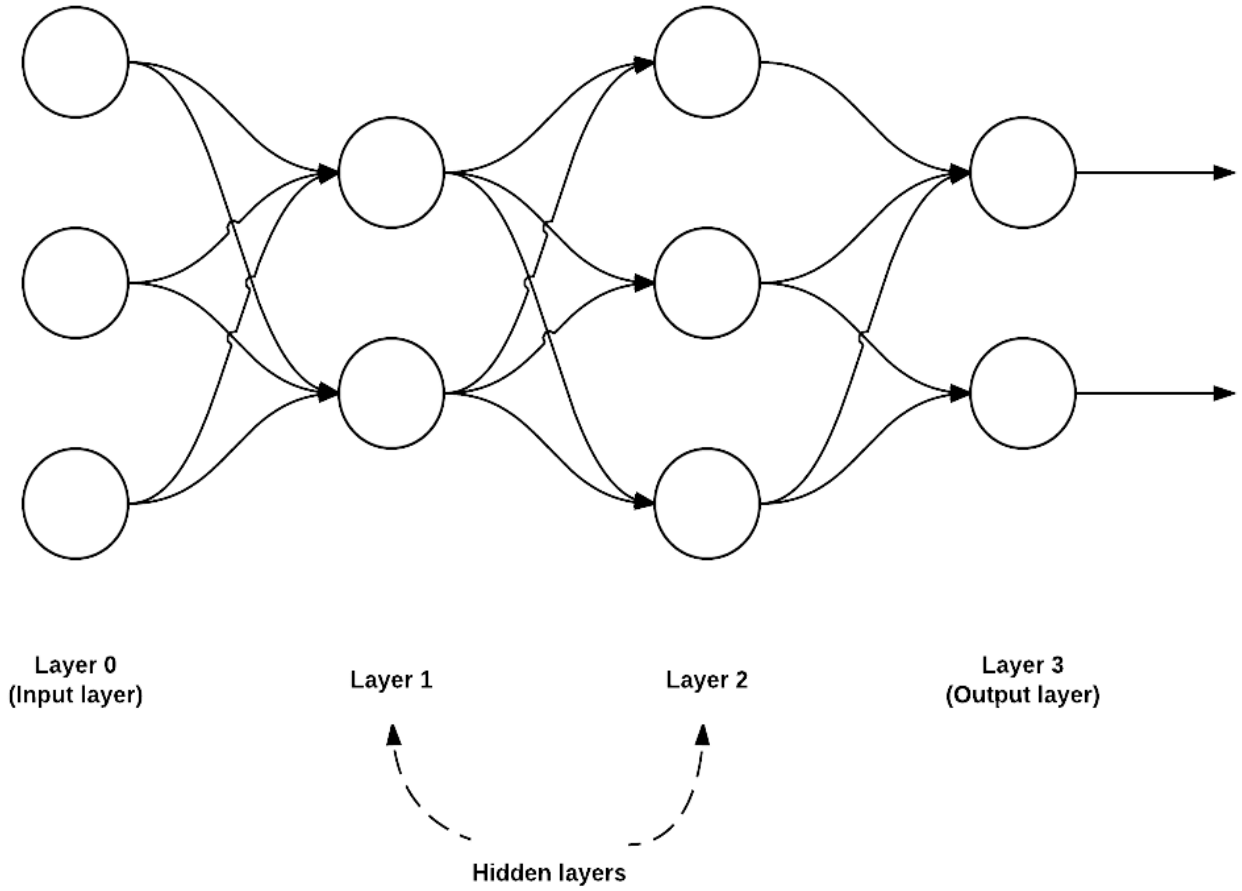

Figure 7: Neural Networks, Rosebrock, 2021

Component	Role
Input Layer	Feeds the data into the network (like prices)
Hidden Layers	Where the *learning* happens (like thinking steps)
Output Layer	Gives the final prediction (e.g., price goes up)
Weights & Biases	Decide the strength of each connection
Activation Function	Adds "intelligence" — decides what to pass on

(Rosebrock, 2021)

Recurrent Neural Network (RNN)

- RNNs uses the output as an input for the next step
- This allows the network to "remember" past information

(Geeksforgeeks, 2025b)

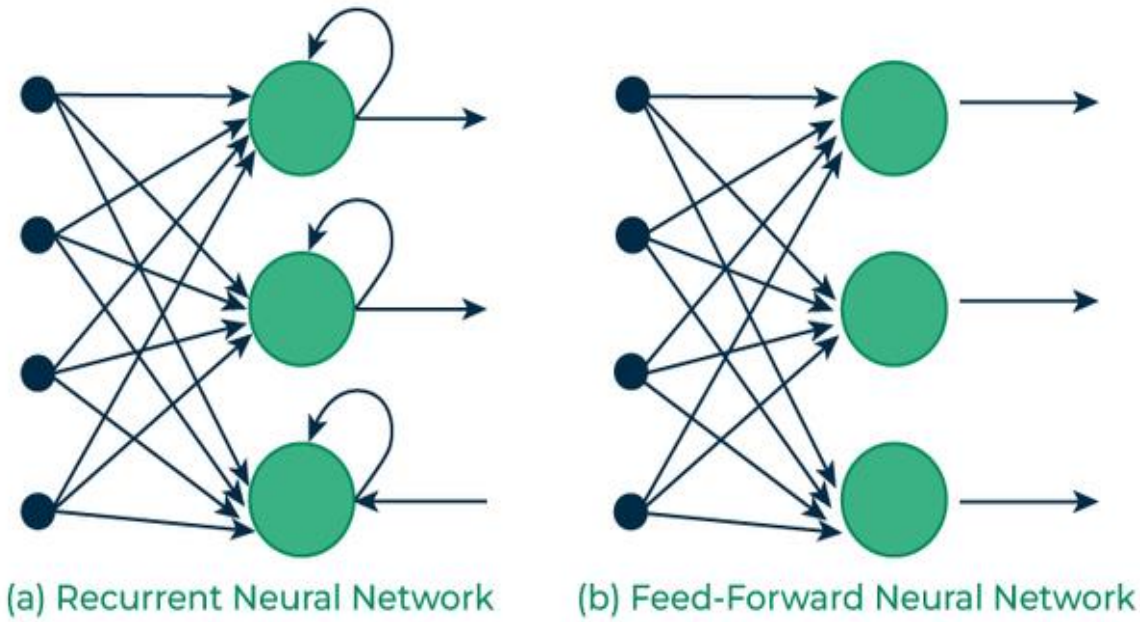

Figure 8: Introduction to RNNs, Geekforgeeks, n.d.

LSTM: Stronger RNNs

Long Short-Term Memory (LSTM) is an enhanced version of the Recurrent Neural Network (RNN) designed by Hochreiter & Schmidhuber.

LSTMs can capture long-term dependencies in sequential data making them ideal for tasks like language translation, speech recognition and time series forecasting.

(Hochreiter & Schmidhuber, 1997)

Architecture

01

Forget gate: Determines what information is removed from the memory cell.

02

Input gate: Controls what information is added to the memory cell.

03

Output gate: Controls what information is output from the memory cell.

(GeekforGeeks, 2025a)

Working of a LSTM Cell

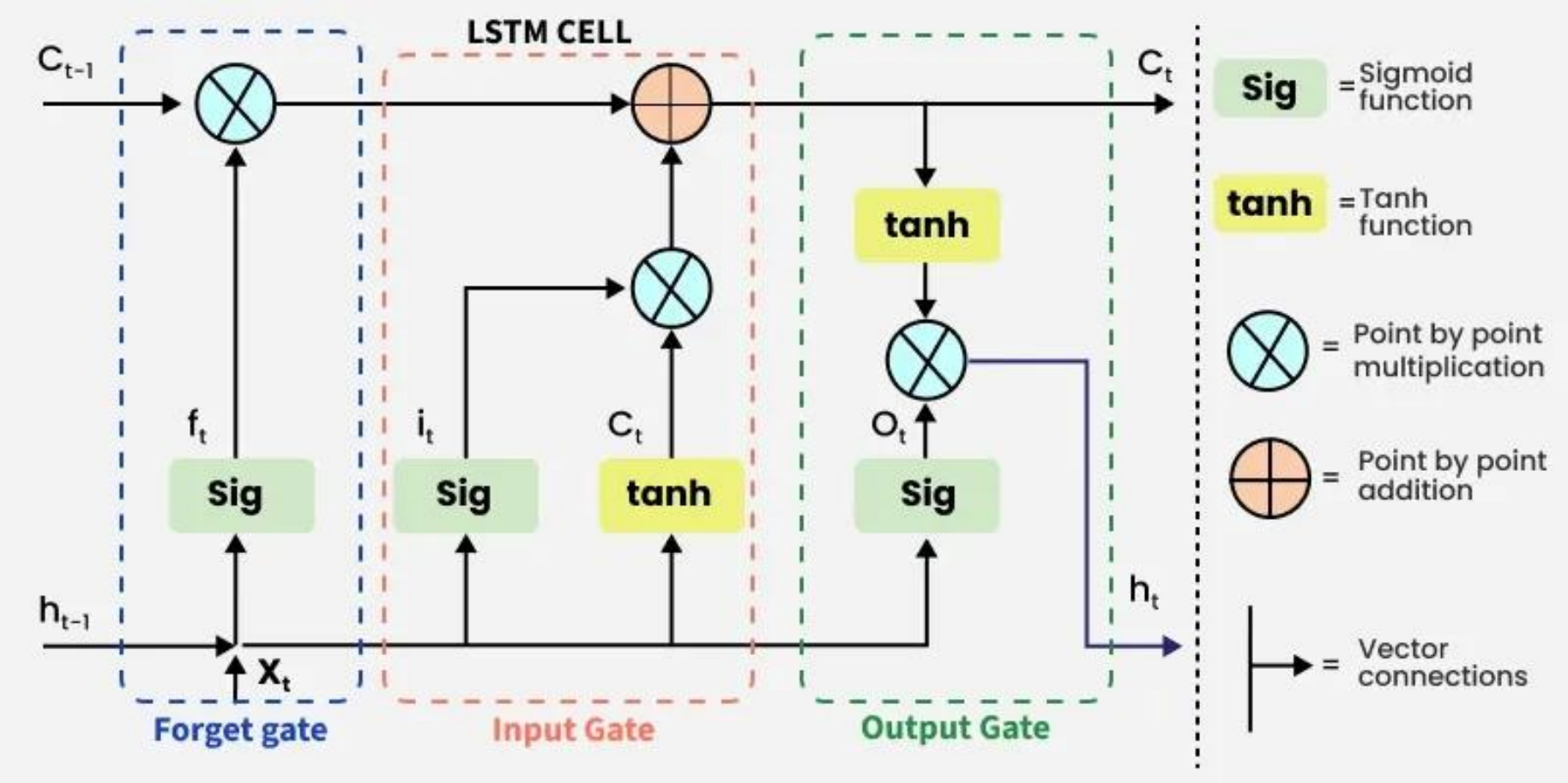

Figure 9: Introduction to LSTMs , GeekforGeeks, 2025a.

C_t :Cell State

h_t: Hidden State

Forget Gate

$$f_t = \sigma(W_f \cdot [h_{t-1}, x_t] + b_f)$$

- W_f represents the weight matrix associated with the forget gate
- $[h_{t-1}, x_t]$ denotes the concatenation of the current input and the previous hidden state
- b_f is the bias with the forget gate
- σ is the sigmoid activation function

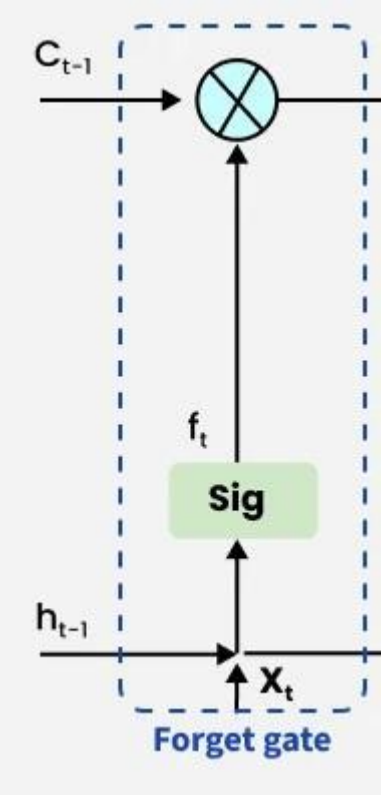

Input gate

The input gate decides what new information to store in the long-term memory (cell state).

- Decide what to remember (with a sigmoid function)

$$i_t = \sigma(W_i \cdot [h_{t-1}, x_t] + b_i)$$

i_t = Input gate output (values between 0 and 1)

- Prepare new information to store (with a tanh function)

$$\tilde{C}_t = \tanh(W_c \cdot [h_{t-1}, x_t] + b_c)$$

C_t = Candidate memory (contains new information, values between -1 and 1)

- Combined: $i_t \cdot \tilde{C}_t$

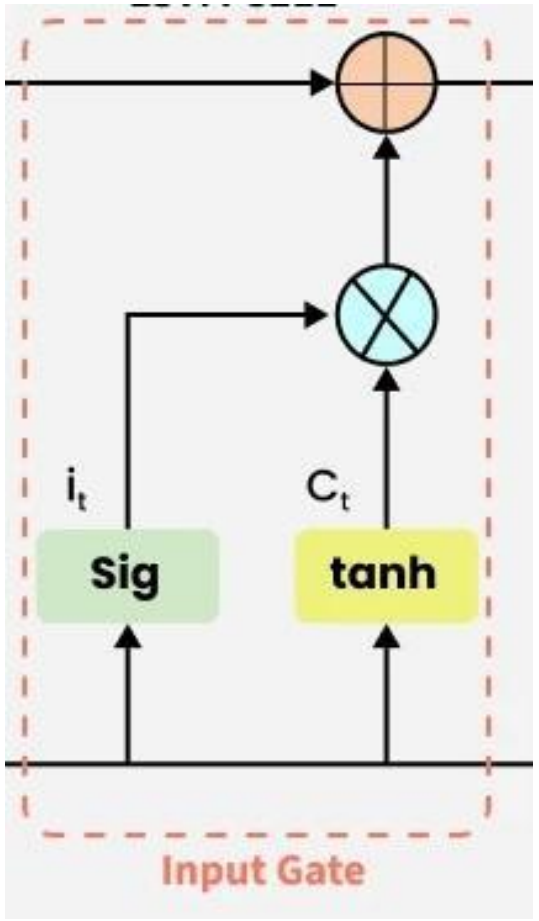

Output Gate

Regulate the Output (Sigmoid gate):

- combine the input and the previous hidden state
- Deciding how much of the cell state should be output using Sigmoid Function

$$o_t = \sigma(W_o \cdot [h_{t-1}, x_t] + b_o)$$

Generate the Candidate Output (Tanh on cell state):

- Use tanh function on the updated cell state C_t
- Gives value between -1 & 1, the raw content the cell has inside it

$$\tilde{h}_t = \tanh(C_t)$$

Final Output:

- Multiply the scaled cell content with the regulated output gate vector

$$h_t = o_t \cdot \tanh(C_t)$$

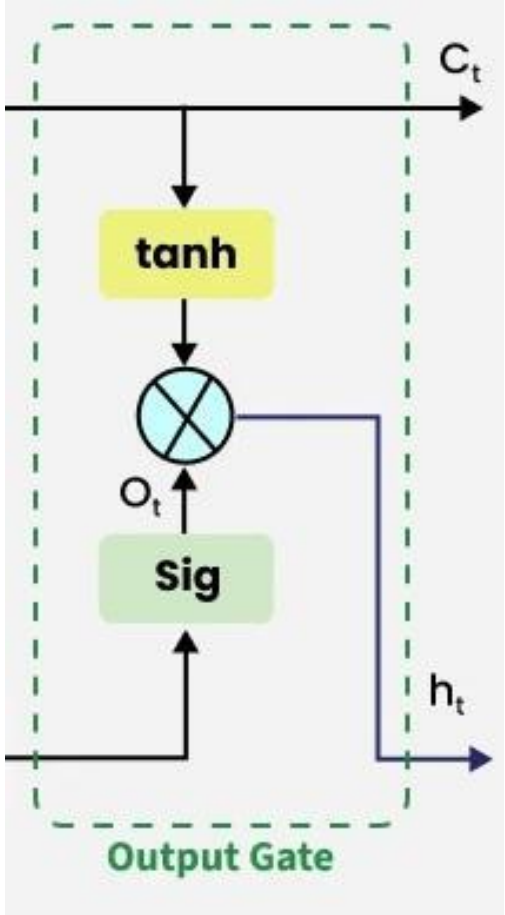

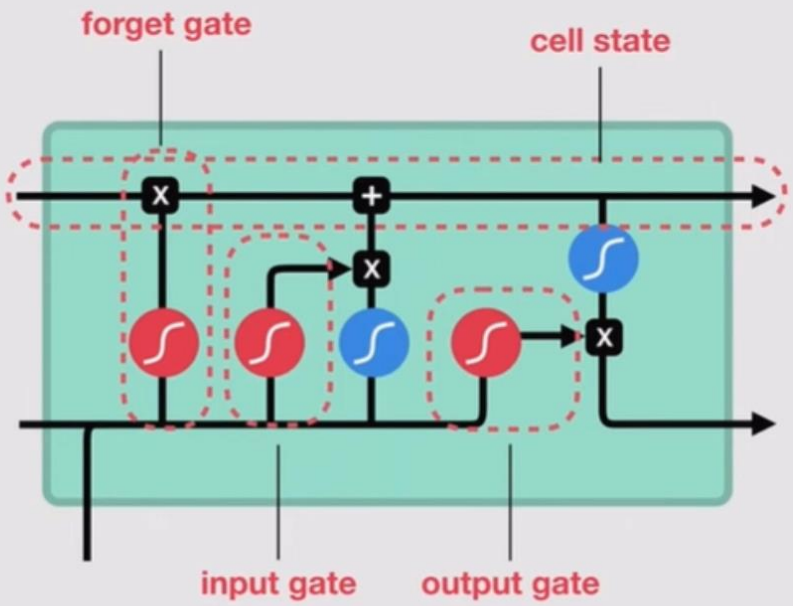

(Video 1: The AI Hacker .2019)

Real Life Use Case

Predicting Vietnamese stock market using LSTM

Article | Open access | Published: 12 March 2024

Applying machine learning algorithms to predict the stock price trend in the stock market – The case of Vietnam

Tran Phuoc, Pham Thi Kim Anh, Phan Huy Tam & Chien V. Nguyen

Humanities and Social Sciences Communications **11**, Article number: 393 (2024) | Cite this article

107k Accesses | **3** Altmetric | Metrics

Download PDF

Associated content

Collection

Top 50 papers: 2015-2024

Sections | Figures

Abstract

Figure 10: Phuoc et al., 2024

The Vietnam Case

1)Data Collection → Focused on 30 large companies in the VN-30 group →

Data collected:

- ✅ Opening price
- ✅ Closing price
- ✅ Highest and lowest prices
- ✅ Trading volume

2)Data Processing Steps → Clean the data: Fix or remove missing or incorrect values. →

Technical indicators:

- SMA – Simple Moving Average
- MACD – Moving Average Convergence Divergence
- RSI – Relative Strength Index

Merge data & Feed to LSTM model

(Phuoc et al., 2024, pg.2)

Model

LSTM model use the data of the previous **60 days** to forecast the stock price at the next day.

- ❑ Layer 1: units = 30, activation = 'relu', Dropout(0.1)
- ❑ Layer 2: units = 40, activation = 'relu', Dropout(0.1)
- ❑ Layer 3: units = 50, activation = 'relu', Dropout(0.1)
- ❑ Layer 4: units = 60, activation = 'relu', Dropout(0.1)

- ➢ Dropout to Avoid Overfitting
- ➢ Epochs :1000
- ➢ Early Stopping with Patience :8

Relu??

Dropout & Overfitting??

Epochs??

Early stopping??

(Phuoc et al., 2024, pg.4-5)

Results

Accuracy Formula $$A_j = \frac{\sum_{i=0}^{n} |P_{ij} - V_{ij}|}{n}$$

- A_j: accuracy of model's forecast for share j
- V_{ij}: actual closing price of j at the ith trading session in the test set
- P_{ij}: forecast result for the price of stock j at that session in test set
- n: number of sessions in the test set

(Phuoc et al., 2024, pg.5)

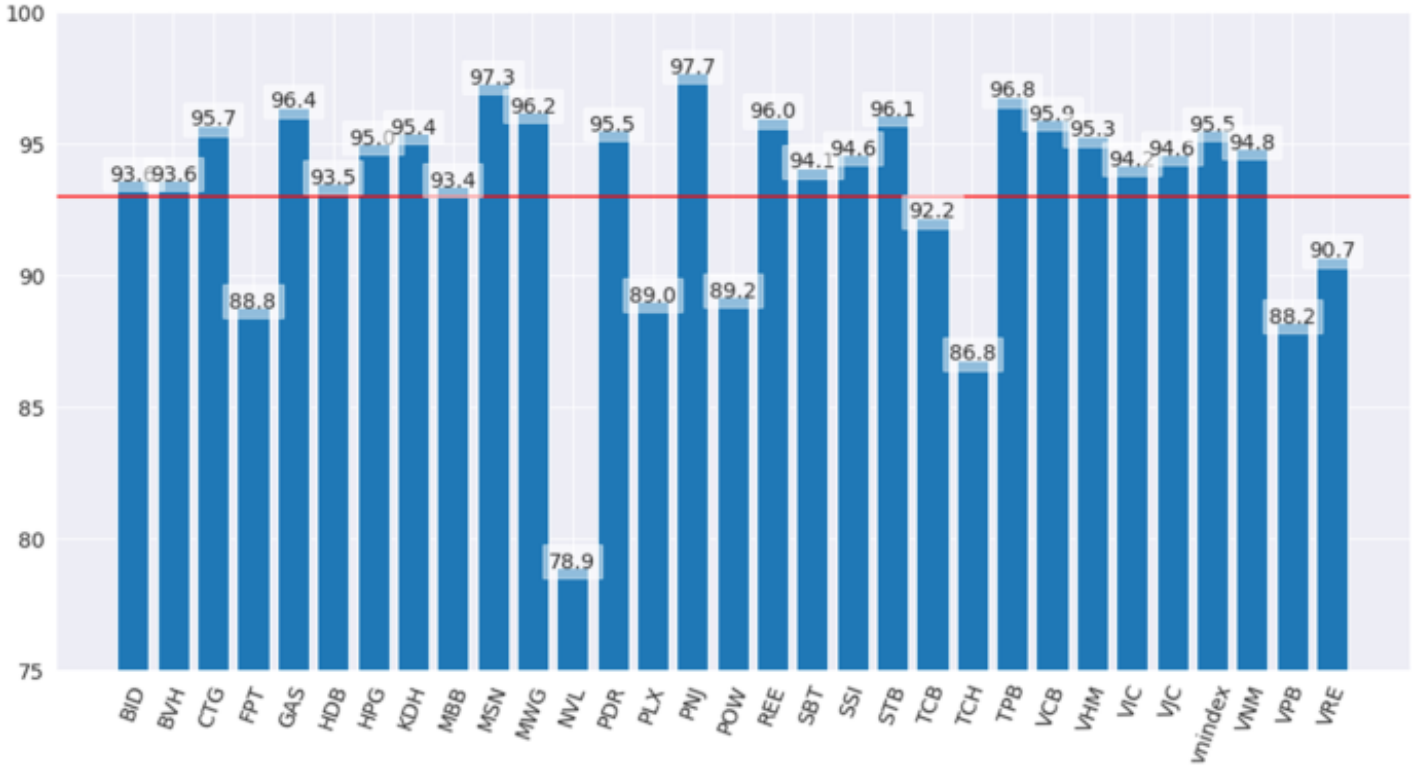

Figure 11: LSTM Accuracy, Phuoc et al., 2024, pg.7

Observations

Fascinating

Some way off...

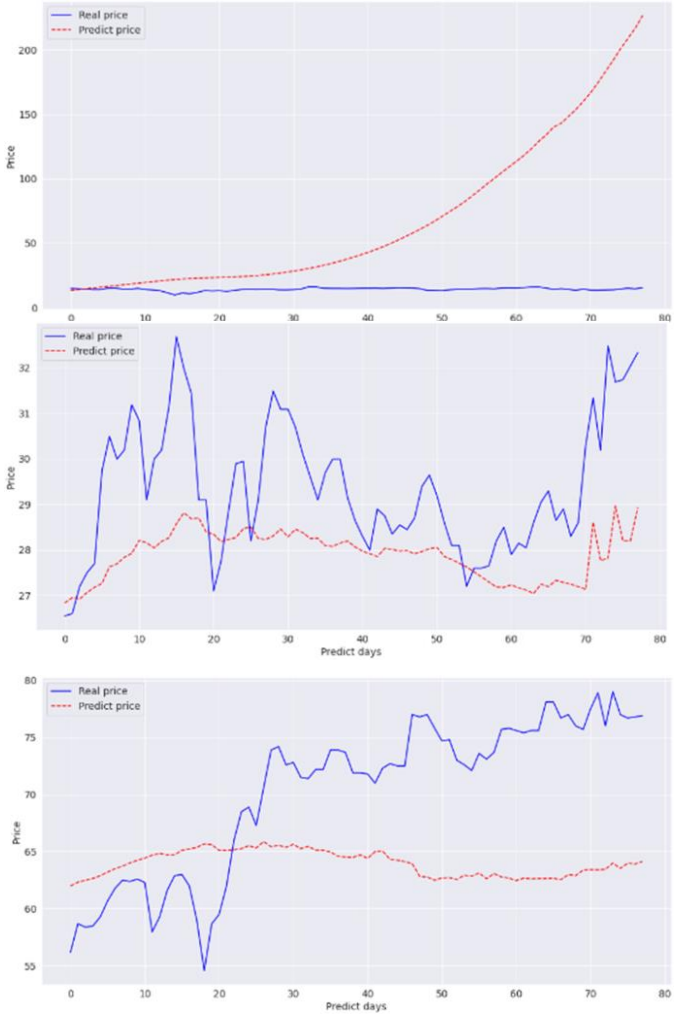

Figure 12: LSTM results, Phuoc et al., 2024, pg.7-17

LSTMs Limitations

Sensitivity to Noisy Data

Difficulty in capturing long-range dependencies

Difficulty Capturing Sudden Market Shifts

Novel Variant of LSTM Incorporating Attention Mechanism

- ✓ **Coupled Input and Forget Gates:** the model simultaneously considers new inputs and the relevance of past information, streamlining the decision-making process
- ✓ **Simplified Forget Gate for Long-Term Memory:** allows the model to selectively discard outdated information, enhancing its ability to focus on relevant data
- ✓ **Incorporation of Attention Mechanism:** Before data enters the LSTM layer, emphasizing critical information and mitigating the impact of noise

(Shuai Sang and Lu Li , 2024, pg. 7)

Enhancement of LSTMs: Comparison

- Adds **interpretability** to the model
- Reduces the impact of irrelevant or noisy features
- Improves generalization by **prioritizing informative data**
- Shown to significantly improve accuracy across multiple datasets
up to 18% better than regular LSTM on test data

(Shuai Sang and Lu Li , 2024, pg. 14-16)

Take home message

"Forecasting the markets is like navigating a maze that's constantly being rebuilt."
- Jim Osman, 2021

Factors:

- Tweets
- Pandemics
- Terrorist Attack
- Company Frauds
- Tarrifs
- New Stock with no Previous Data

Getting Better Every day:

- LSTMs Improve everyday
- Advanced GPUs ,better training
- Enhancements Algorithms

List of References

- Carlson, J. (2024). How to find Compounding Machines –A full Guide. URL: https://www.youtube.com/watch?v=wENEfGzuRVA&t=900s
- Dorsey, P. (2008). The Little Book that Builds Wealth. John Wiley & Sons, Inc. New Jersey.
- Geeksforgeeks. (2025a). Introduction to Long short-Term Memory. URL: https://www.geeksforgeeks.org/deep-learning-introduction-to-long-short-term-memory/
- Geeksforgeeks. (2025b). Introduction to Recurrent to Neural Network. URL: https://www.geeksforgeeks.org/introduction-to-recurrent-neural-network/
- Hochreiter, S. & Schmidhuber, J. (1997). Long Short-Term Memory. https://doi.org/10.1162/neco.1997.9.8.1735
- López de Prado, M.(2018). *Advances in Financial Machine Learning*. Wiley.
- Rosebrock, A. (2021). Introduction to Neural Networks. URL: https://pyimagesearch.com/2021/05/06/introduction-to-neural-networks/
- Sang, S., & Li, L. (2024). A Novel Variant of LSTM Stock Prediction Method Incorporating Attention Mechanism. Mathematics, 12(7), 945. https://doi.org/10.3390/math12070945

List of References

- Vuković, D. B., Radenković, S. D., Simeunović, I., Zinovev, V., & Radovanović, M. (2024). Predictive Patterns and Market Efficiency: A Deep Learning Approach to Financial Time Series Forecasting. Mathematics, 12(19), 3066. https://doi.org/10.3390/math12193066
- Yahoo finance. (n.d.a). NIKE, Inc. (NKE): Summary. URL: https://finance.yahoo.com/quote/NKE/
- Yahoo finance. (n.d.b). Palantir Technologies Inc. (PLTR): Summary. URL: https://finance.yahoo.com/quote/PLTR/
- Zuckerman, G.(2019). *The Man Who Solved the Market: How Jim Simons Launched the Quant Revolution*.

List of Figures

- Figure 1: Powerpoint
- Figure 2: Powerpoint
- Figure 3: URL:https://www.forbes.com/profile/warren-buffett
- Figure 4: URL: https://www.palantir.com/newsroom/media
- Figure 5: URL: https://www.macrotrends.net/stocks/charts/NFLX/netflix/revenue
- Figure 6: URL: https://www.math.harvard.edu/jim-simons-dies-at-86
- Figure 7:URL:https://pyimagesearch.com/2021/05/06/introduction-to-neural-networks
- Figure 8: URL:https://media.geeksforgeeks.org/wp-content/uploads/20231204130132/RNN-vs-FNN-660.png

List of Figures

- Figure 9: URL: https://www.geeksforgeeks.org/deep-learning-introduction-to-long-short-term-memory/
- Figure 10: URL : https://www.nature.com/articles/s41599-024-02807-x
- Figure 11: URL: https://www.nature.com/articles/s41599-024-02807-x
- Figure 12: URL: https://www.nature.com/articles/s41599-024-02807-x

Video 1:URL : https://www.youtube.com/watch?v=8HyCNIVRbSU&t=288s

Comments??

Questions??

FEEDBACK??

Fragen??

Improvements??